REVISION HISTORY			
REV.	DESCRIPTION	DATE	APPRO

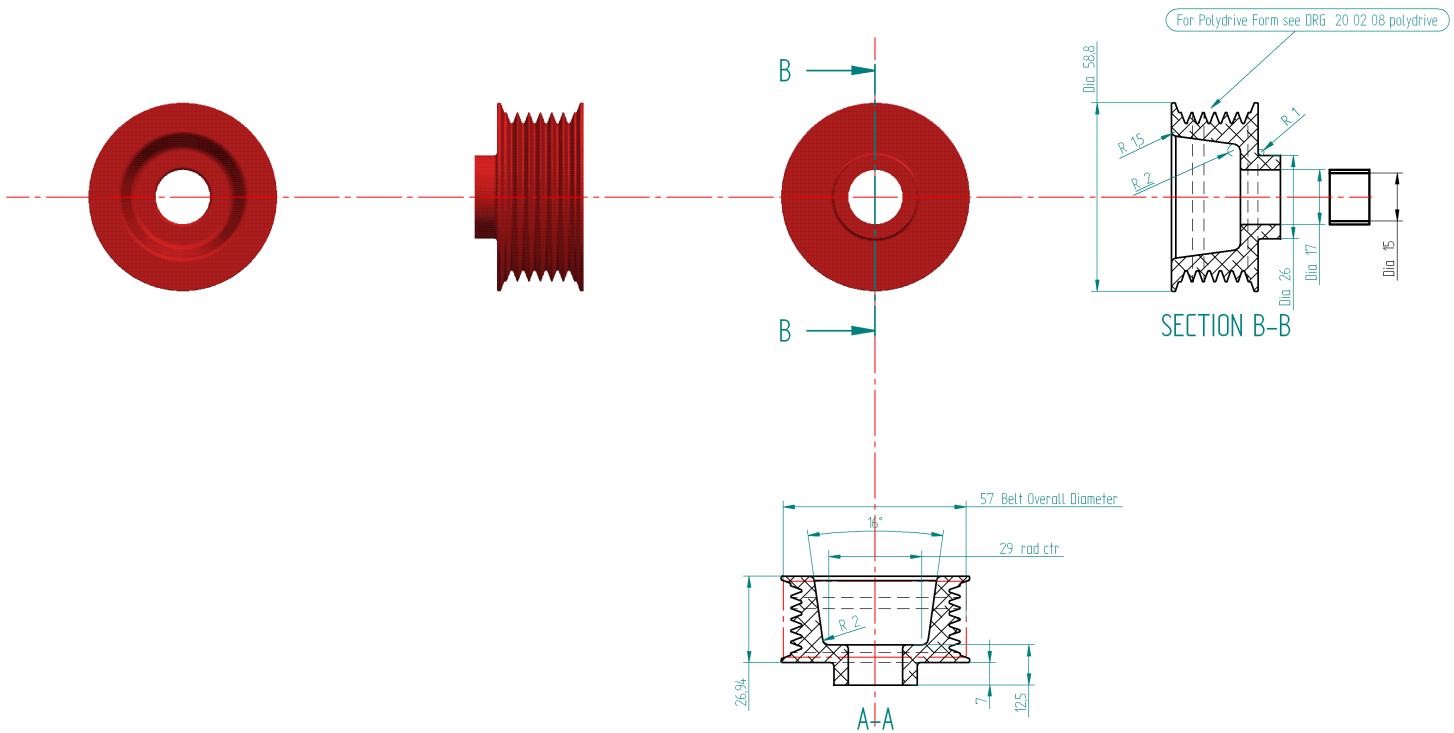

Material	Aluminium 6082-T6	Finish	3.5	Treatment	Debur
	NAME	DATE	BRISE Auto-Electrical Systems		
DRAWN	T.M.	20 02 08			
CHECKED			TITLE 2576		
ENG APPR					
MGR APPR					
UNLESS OTHERWISE SPECIFIED DIMENSIONS ARE IN MILLIMETERS ANGLES ±0.25°			SIZE A2	DWG NO 200208 2576	REV A
			Cad file		
2 PL ±0.10 3 PL ±0.025			SCALE: 1/1	WEIGHT: 93 g	SHEET 1

© Copyright Brise Ltd. Unit Q3 Northfleet Industrial Estate DA11 9SN
All Rights Reserved